LEED 450 Configuration Guide and Specifications

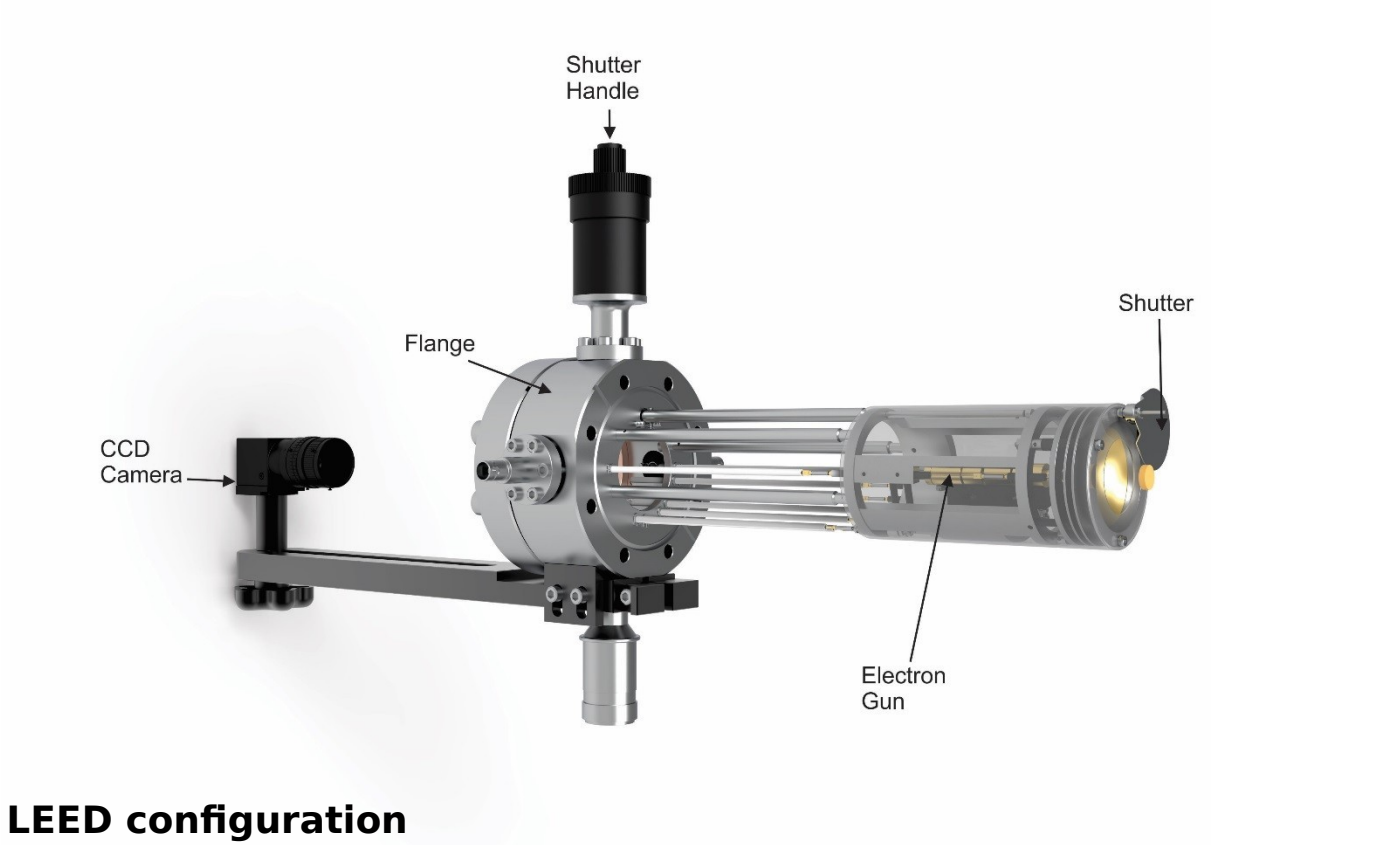

LEED configuration

Base configuration		
Model	Order Code	
BDL450		Back-Display LEED-Auger optics, with 3 grid high resolution retarding field (1%) analyzer (81% transmission), integral miniature electron gun with 10 mm O.D. lenses made of gold plated copper alloy and thoriated tungsten wire filament, optical quality glass-luminescent display with 32 mm radius, 90 deg. solid angle display and Mu-metal magnetic shield with front shield mounted on the double sided CF4.5" (DN63CF) flange. Viewport and mounting kit included. Flange to sample distance: to be specified.
LMX-EXT		External linear retraction
LPS075-D	AO00023	Digital power supply (0-750 V) with USB interface and PC control software for Windows 10. True primary beam current and total emission measurements. Automatic start-up and shut down, 10 memory settings including standby and outgassing mode with timer, constant beam current mode controlled by filament current or Wehnelt voltage. All cables included.
Options		
ISH-45		Integral shutter for BDL450
LaB_6		LaB_6 single crystal filament instead of a tungsten wire filament
Electronics Upgrade		
LPS300-D-UP		Upgrade from LPS075-D to LPS300-D
LOA10-AES	AO00025	Model LOA10-AES, Digital AES controller with lock-in amplifier, AES high voltage ramp board 0-2.0 kV with precision sinewave oscillator (0.5-20 Vpk-pk) and AES software. Serial RS232 or USB communication to PC. High Auger signal sensitivity based on integrated band-pass filter and pre-amplifier (0.05% of monolayer for Ag peak 351-356 eV). All cables included.

LEED and AES configuration

Base configuration		
Model	Order Code	
BDL450		Back-Display LEED-Auger optics, with 3 grid high resolution retarding field (1%) analyzer (81% transmission), integral miniature electron gun with 10 mm O.D. lenses made of gold plated copper alloy and thoriated tungsten wire filament, optical quality glass-luminescent display with 32 mm radius, 90 deg. solid angle display and Mu-metal magnetic shield with front shield mounted on the double sided CF4.5" (DN63CF) flange. Viewport and mounting kit included. Flange to sample distance: to be specified.
LMX-EXT		External linear retraction
LPS300-D		Digital LEED-Auger power supply (0-3.2 kV) with USB interface and PC control software for Windows 7. True primary beam current and total emission measurements. Automatic start-up and shut down, 10 memory settings including outgassing with timer, automatic switch from LEED to AES, constant beam current mode. All cables included.
Options		
ISH-45		Integral shutter for BDL450
LaB_6		LaB_6 single crystal filament instead of a tungsten wire filament
LOA10-AES		Model LOA10-AES, Digital AES controller with lock-in amplifier, AES high voltage ramp board 0-2.0 kV with precision sinewave oscillator (0.5-20 Vpk-pk) and AES software. Serial RS232 or USB communication to PC. High Auger signal sensitivity based on integrated band-pass filter and pre-amplifier (0.05% of monolayer for Ag peak 351-356 eV). All cables included.

LEED Software

Software Options		
Model	Order Code	
LIM12		Full version LEED pattern measurements, analysis software & hardware for Windows 10 including: -12-bit colour or black and white high-performance video CCD camera with sensitivity control - 1/3” CCD sensor size, 1.3 MP (1288x964) - sized images, 3.75 um pixel size, CS-mount lenses - Linear Full Well: 9000e-, Dynamic Range: 59 dB - PCIe express USB3.1 card (option if computer doesn't have USB3.1) - Flange mounting kit with ambient light cover and cables Software features: - Automatic LEED pattern acquisition - Automatic I-V analysis with spot tracking - Automatic I-T analysis - Automatic spot profile analysis
LIM12B		Basic LEED pattern measurements and analysis software and hardware for Windows 10 including: -12-bit colour high performance video CCD camera with sensitivity control and USB3 interface -1/3” CCD sensor size, image size: 1.3 MP (1288x964), 3.75 um pixel size, CS-mount lenses -Linear Full Well: 9000e-, Dynamic Range: 59 dB -PCIe express USB3.1 card (option if computer doesn't have USB3.1) -Automatic LEED pattern acquisition -Flange Mounting kit with ambient light cover and cables
LIM14		Advanced LEED pattern measurements, analysis software & hardware for Windows 10 including: -14-bit colour or black and white high-performance scientific grade CCD camera

		with sensitivity control and USB 3 interface: 2/3" CCD sensor size and 1.4-megapixel resolution (1384x1032), 6.45 um pixel size, C-mount lenses - Linear Full Well: 22,000e-, extremely low noise, Dynamic Range: 68 dB - PCIe express USB3.1card (option if computer doesn't have USB3.1) - Flange mounting kit with ambient light cover and cables. Software features: - Automatic LEED pattern acquisition - Automatic I-V analysis with spot tracking - Automatic I-T analysis - Automatic spot profile analysis

Detailed Specifications

BDL800IR optics	
Glass display	Fused silica glass coated with indium-tin oxide conductive layer and P31 phosphor (ZnS:Ag:Cu-green, 525 nm wavelength)
Angle of acceptance	90° from sample at a distance of 32 mm
Retarding Field Analyzer	Concentric assembly of hemispherical grids
Working distance from sample	10 mm
Grid material	Gold coated tungsten wire mesh (100 mesh, 81% transparency)
Energy resolution	0.8% at low modulation voltage
Monitoring	4.5” standard viewport
Linear motion	External nipple with bellow up to 150 mm retraction from sample
Integral shutter	Manual shutter driven by a rotary feedthrough
Magnetic shielding	Mu metal cylinder with front cover for maximum attenuation
Assembly	Extreme high vacuum compatibility with stainless steel, high alumina and Au-plated copper alloy materials
Mounting	CF4.5” (DN63CF) double sided conflat flange with sample distance 145 mm 580mm
Bakeability	Under vacuum, 250°C maximum

Integral miniature electron gun	
Beam energy	LEED: 0-750 eV AES: 0-3000 eV
Beam current	LEED: 2 μA at 100 eV and 0.5 mm beam size AES: up to 100 μA at 3 keV
Beam size	From 1 mm to 250 μm-adjusted by wehnelt potential
Electron source	Tungsten 2% thoriated filament (standard) or single crystal LaB_6 filament (optional)
Energy spread	0.45 eV (thoriated-tungsten filament)
Overall size	10 mm lens diameter and 80 mm length

LPS075-D and LPS300-D Electronics	
Beam Voltage	LPS075-D: negative 0-750 V LPS300-D: negative 0-3000 V
Filament current	0-3.2 A Tungsten/ 0-2.1 A LaB_6
Wehnelt voltage	0-37 V with respect to the filament
Focus voltage	LEED: positive 70-180% of the beam voltage AES: negative 0-3000 V
Retarding (grid) voltage	Negative 50-110% of the beam voltage
Screen voltage	Positive 0-5000 V
Emission current	1-200 μA
Beam current	0.01-200 μA
Monitoring	All voltages and currents
Display	Vacuum fluorescent, displaying all voltages, currents and program functions
On-board automation	5 pre-programmed and fully programmable operating programs for outgassing, stand-by, filament forming, beam voltage scanning, constant beam current and diagnostics

Manual control	Of all voltages via rotary dials and selection switches
PC control	PC software for full control of all functions via USB
Protection	Over-voltage, over-current, and short circuit
Dimensions	3U 19” rack mount (5.25”/133 mm), depth of 17.5” (440 mm), weight 12 kg

High Voltage Ramp Generator Model LOA10-AES (Lock-In)		
Sweep Generator	Sweep Voltage	0–2000 V
	Sweep Rate	AES software controlled (16-bit DAC)
	Sweep Voltage Offset (start)	AES software controlled (16-bit DAC)
	Sweep Voltage Offset (end)	AES software controlled (16-bit DAC)
	Ramp Voltage Monitor	AES software controlled (16-bit DAC)
Internal Oscillator and Modulator	Frequency	Fixed at 1.457 kHz, trimmer adjusted ±5%
	Amplitude (peak-to-peak)	Regulated from 0.5 to 20 V (16-bit DAC)
	Distortion	Harmonic 0.1% Noise 50 µV RMS
PSD	Type	Switching multiplier
	Input Impedance	AC coupled, 100 nF into 1 MΩ
	Input	True differential
	AC Gain	10, 100, 1000, 10000 (and 1, 2, 4, 8) software selectable
	Interstage Coupling	Simple high pass typically with ~ 3 dB per 72 Hz
	Post Detection Low Pass Filter	Equal component Sallen-Key, 2nd order with a time constant of 0.1, 0.5, 1, and 3 s
	Signal Channel Equivalent Input Noise	Typically, less than 20 nV/Hz at 1 kHz
PLL	Input Impedance	AC coupled, 10 nF into 1 MΩ
	Frequency Range	0.2–7.5 kHz with a typical phase jitter < 0.2%
	Locks Onto	The fundamental or 2nd harmonic
ADC	Chip	TI ADS7807
	Resolution	16 bits
	Accuracy	±1.5 LSB max INL
	Conversion Time	25 µs
DAC	Chip	TI DAC715
	Resolution	16 bits
	Settling Time	3 µs
	Channels	1
Computer Interface	USB	
Software	AES data acquisition and analysis software for Windows 7/10	
Dimensions	2U 19” rack mount (3.5” / 89 mm), depth of 13.5” (343 mm), weight 6 kg.	

Low Noise Input Coupler Model AUS30		
Input Impedance	10 MΩ (internal bandpass filter)	
Amplifier	FET input, 500 gain	
Dimensions	180 mm × 105 mm × 65 mm	
Low Noise Bandpass Filter	Central Frequency	2.95 kHz
	3 dB Band Width	200 Hz
	20 dB Band Width	7.83 kHz